U BRACKET UB2208(W) Owner's Manual

EN

YAMAHA

Thank you for choosing this Yamaha product.
Please read this manual carefully before using it in a speaker installation.
Keep the manual in safe place for future reference.

⚠ ***CAUTION*** **When attaching the U-bracket to a wall or other vertical structure, DO NOT position the bracket vertically. Make sure to install the bracket horizontally.**

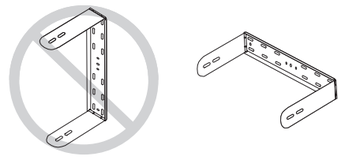

Installation Instructions

1. Remove the speaker's center side screws.

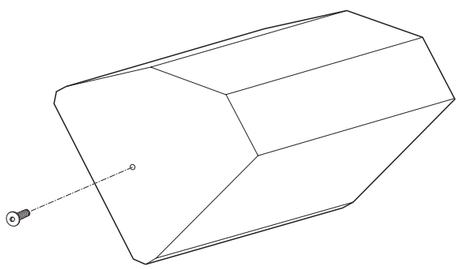

2. Place the U-bracket over the speaker cabinet and confirm that you have ordered the correct bracket.

Temporarily insert the sound isolation gaskets between the arms of the bracket and the speaker. Remove the bracket from speaker.

3. Select the area where the speaker will be mounted. Make sure the mounting surface is structurally adequate for supporting the weight of the speaker. Do not attempt to install to drywall, acoustic tiles, etc.

4. Attach the base of the U-bracket to the wall or ceiling using the appropriate hardware. Tighten the hardware permanently.

The appropriate hardware and bolts for this step are not included in this package. If in doubt as to what hardware to use, consult a hardware specialist.

⚠ ***CAUTION***
When attaching the U-bracket to a wall or other vertical structure, DO NOT position the bracket vertically. Make sure to install the bracket horizontally.

5. Snap on the cover plate to the base of the U-bracket.

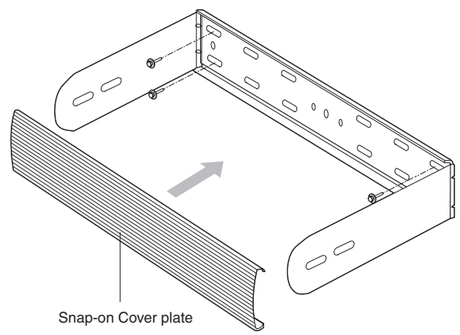

6. Position the speaker in between the bracket arms with the sound isolation gaskets. Secure the speaker to the bracket using the included hardware through the desired slots into the speaker enclosure's threaded mounting holes.

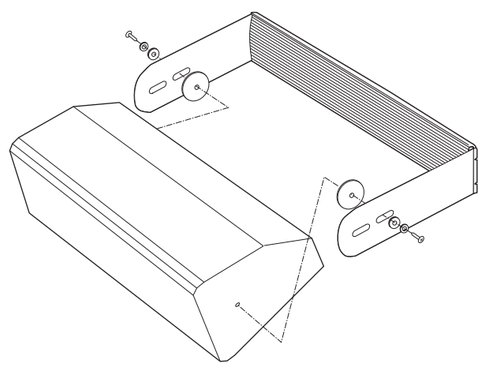

7. Rotate the speaker to the desired direction then fully secure the side bolts.

⚠ ***CAUTION***
Secure the speaker to the mounting structure with a properly rated safety cable.

PRECAUTIONS ***PLEASE READ CAREFULLY BEFORE PROCEEDING***

*** Please keep this manual in a safe place for future reference.**

⚠ ***CAUTION*** **Always follow the basic precautions listed below to avoid the possibility of physical injury to you or others, or damage to the device or other property. These precautions include, but are not limited to, the following:**

- Before doing any installation or construction work, consult with an installation expert.
- Make sure that the surface this bracket is being mounted on has the strength to handle the weight of both the speaker and this bracket.
- Use bolts and nuts as well as washers for installation and tighten them firmly so that the speaker is secure and does not move.
- Always loosen the corresponding screw before adjusting the angle or direction of the speaker. Never force this adjustment with the screw still tightened.
- Some fittings may deteriorate over extended periods of time due to wear and/or corrosion. For optimum safety, the installation should be checked thoroughly at regular intervals.

Yamaha cannot be held responsible for damage or injury caused by insufficient strength of the support structure or improper installation.

* Illustrations herein are for explanatory purposes only, and may not match actual appearance during operation.

* Company names and product names herein are trademarks or registered trademarks of their respective companies.

* Specifications and descriptions in this owner's manual are for information purposes only. Yamaha Corp. reserves the right to change or modify products or specifications at any time without prior notice. Since specifications, equipment or options may not be the same in every locale, please check with your Yamaha dealer.

Package Contents

UB2208(W)

- ❒ U-mount bracket (1 pc.)
- ❒ M10-40mm button head socket screws (2 pcs.)
- ❒ Friction gaskets, 1/8" thick (2 pcs.)
- ❒ Split lock washers, M10 (2 pcs.)
- ❒ Flat Washer, M10 (2 pcs.)
- ❒ Wrench, hex L-key, M10 (1 pc.)
- ❒ Snap-on cover plate (1 pc.)
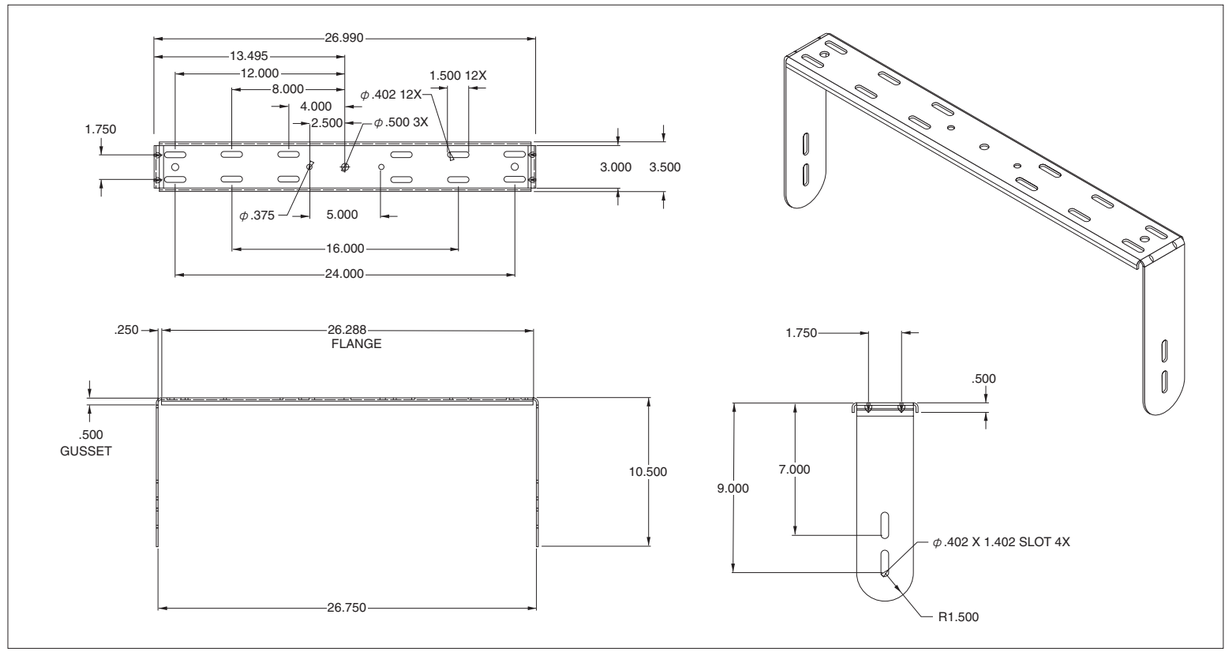
Dimensions